STROMBERG® CARBU ERS
SPARE PARTS SCHE LE

ROVER
1968
LANDROVER 2·6 Litre

Carburetter	Zenith Ref. †	Ref.
175 CD-2S	3136	6956

†(Stamped on carburetter flange)

Parts supplied may not always conform exactly to illustration.

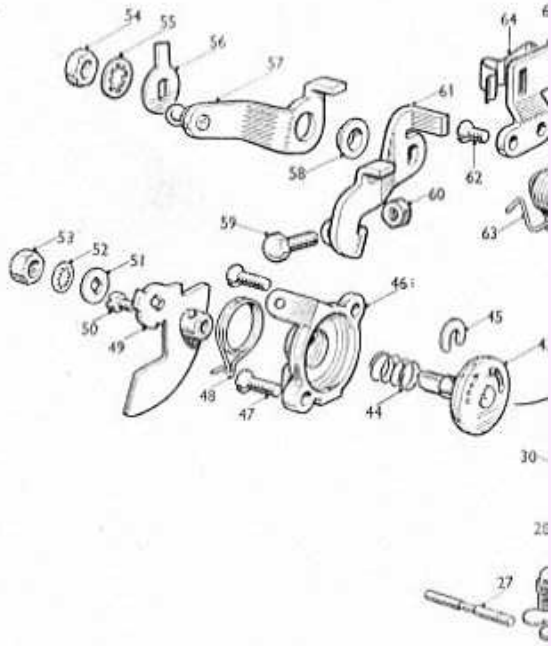

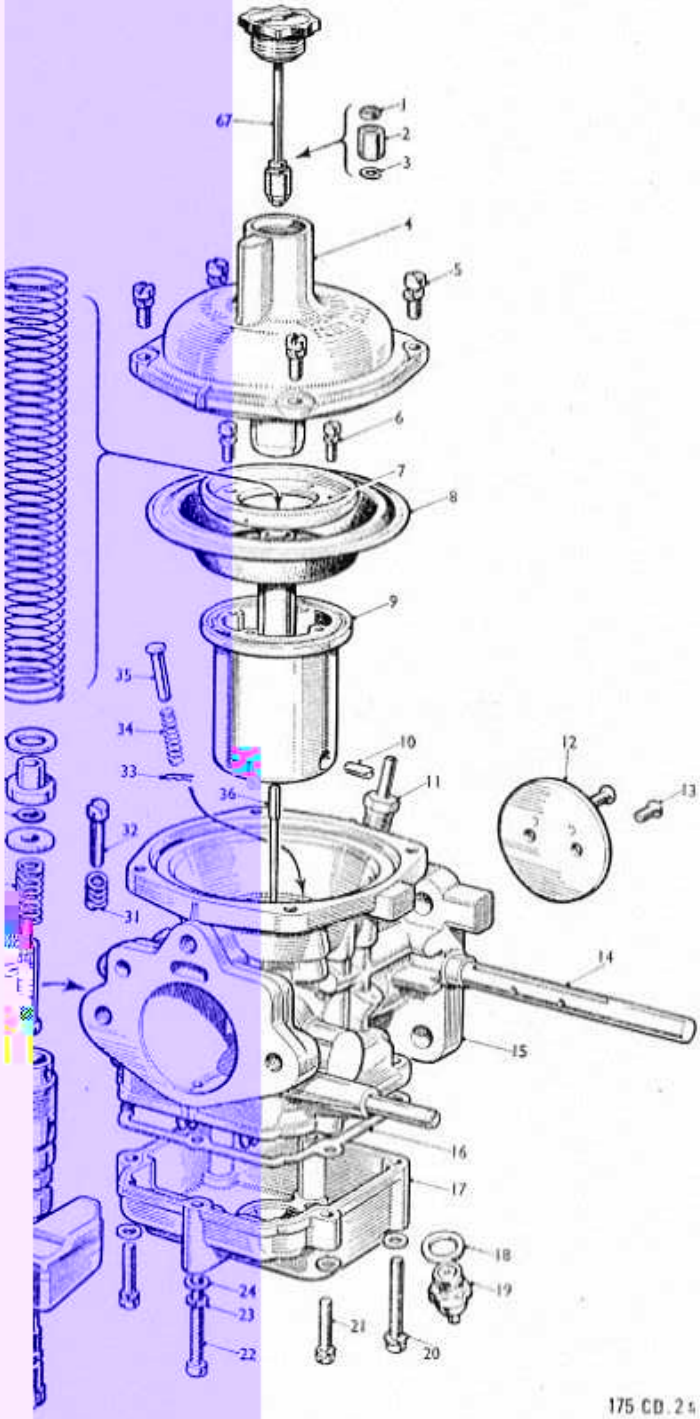

STAN SETTING:

Metering Needle	Air Valve Return Spring	Need	Fast-idle Interconnection Setting	Float Height
B.18362.Z/4J	B.18277.Z	B.178	1·1 mm. or No. 57 drill at edge of throttle.	17·5 mm.