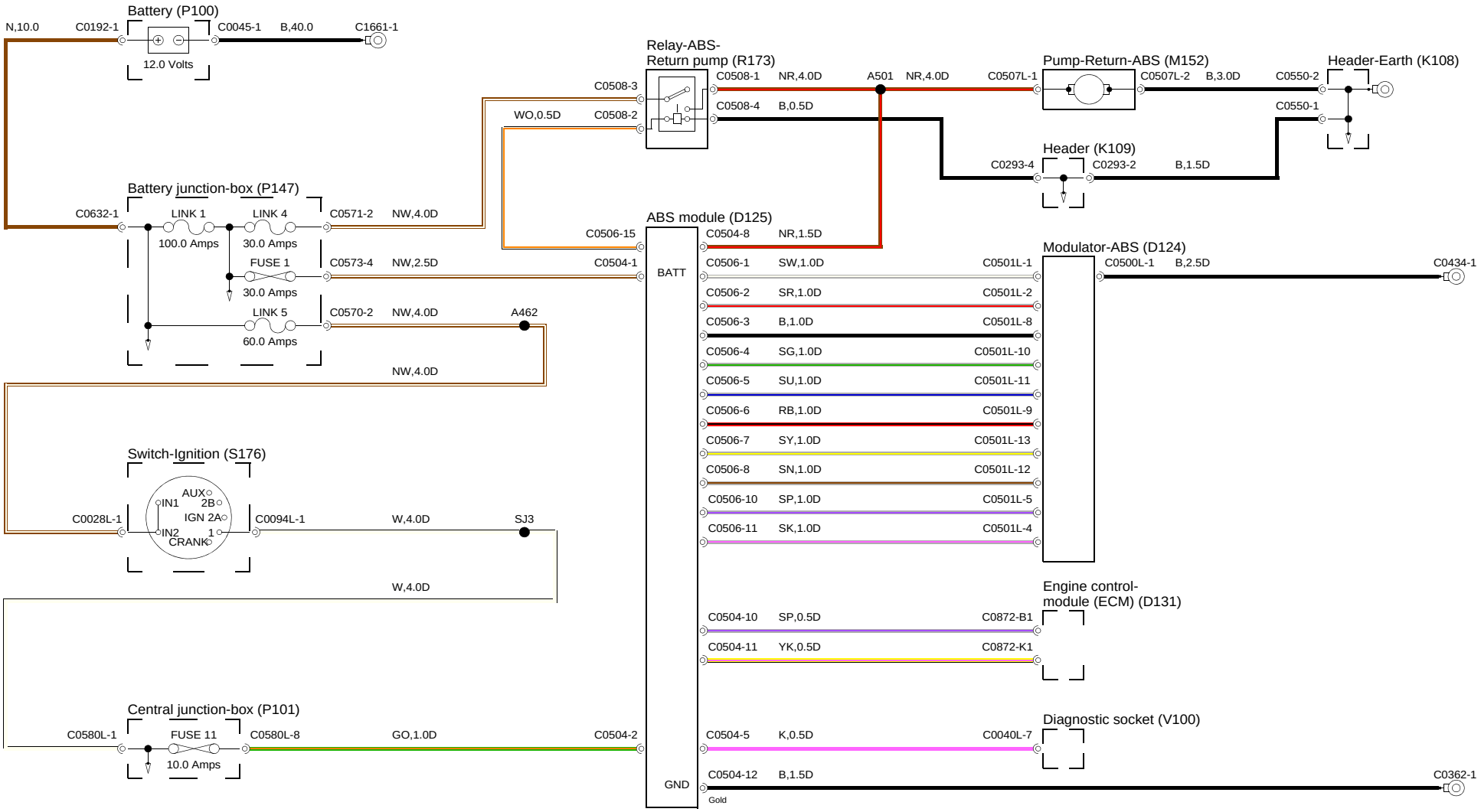
Battery (P100)
N,10.0
C0192-1
C0045-1
B,40.0
C1661-1
12.0 Volts
Relay-ABS-
Return pump (R173)
C0508-3
C0508-1
NR,4.0D
A501
NR,4.0D
C0507L-1
Pump-Return-ABS (M152)
C0507L-2
B,3.0D
C0550-2
Header-Earth (K108)
C0508-4
B,0.5D
C0550-1
WO,0.5D
C0508-2
Header (K109)
C0293-4
C0293-2
B,1.5D
Battery junction-box (P147)
C0632-1
LINK 1
100.0 Amps
LINK 4
30.0 Amps
C0571-2
NW,4.0D
FUSE 1
30.0 Amps
C0573-4
NW,2.5D
LINK 5
60.0 Amps
C0570-2
NW,4.0D
A462
NW,4.0D
ABS module (D125)
C0506-15
C0504-8
NR,1.5D
C0504-1
BATT
C0506-1
SW,1.0D
C0501L-1
Modulator-ABS (D124)
C0500L-1
B,2.5D
C0434-1
C0506-2
SR,1.0D
C0501L-2
C0506-3
B,1.0D
C0501L-8
C0506-4
SG,1.0D
C0501L-10
C0506-5
SU,1.0D
C0501L-11
C0506-6
RB,1.0D
C0501L-9
C0506-7
SY,1.0D
C0501L-13
C0506-8
SN,1.0D
C0501L-12
C0506-10
SP,1.0D
C0501L-5
C0506-11
SK,1.0D
C0501L-4
Switch-Ignition (S176)
AUX
IN1
2B
IGN 2A
IN2
1
CRANK
C0028L-1
C0094L-1
W,4.0D
SJ3
W,4.0D
Engine control-
module (ECM) (D131)
C0504-10
SP,0.5D
C0872-B1
C0504-11
YK,0.5D
C0872-K1
Central junction-box (P101)
C0580L-1
FUSE 11
10.0 Amps
C0580L-8
GO,1.0D
C0504-2
Diagnostic socket (V100)
C0504-5
K,0.5D
C0040L-7
GND
C0504-12
B,1.5D
C0362-1
Gold

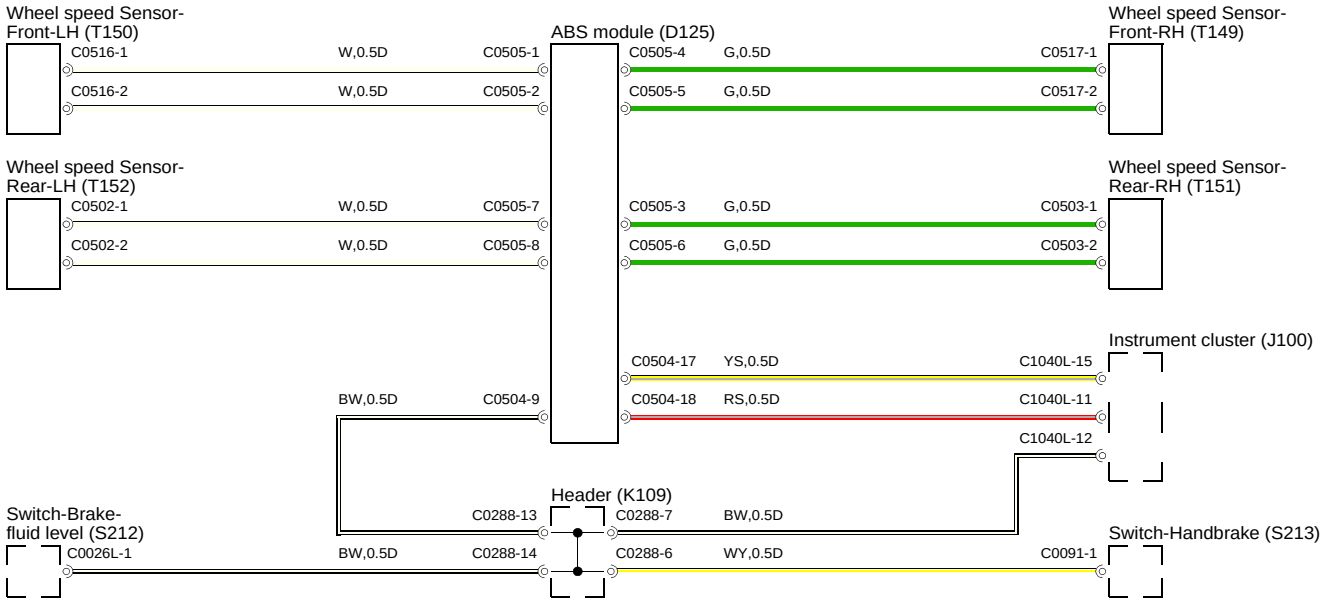
Wheel speed Sensor-
Front-LH (T150)
C0516-1
W,0.5D
C0505-1
C0516-2
W,0.5D
C0505-2
ABS module (D125)
C0505-4
G,0.5D
C0517-1
C0505-5
G,0.5D
C0517-2
Wheel speed Sensor-
Front-RH (T149)
Wheel speed Sensor-
Rear-LH (T152)
C0502-1
W,0.5D
C0505-7
C0502-2
W,0.5D
C0505-8
C0505-3
G,0.5D
C0503-1
C0505-6
G,0.5D
C0503-2
Wheel speed Sensor-
Rear-RH (T151)
Instrument cluster (J100)
C0504-17
YS,0.5D
C1040L-15
BW,0.5D
C0504-9
C0504-18
RS,0.5D
C1040L-11
C1040L-12
Header (K109)
Switch-Brake-
fluid level (S212)
C0288-13
C0288-7
BW,0.5D
C0026L-1
BW,0.5D
C0288-14
C0288-6
WY,0.5D
C0091-1
Switch-Handbrake (S213)