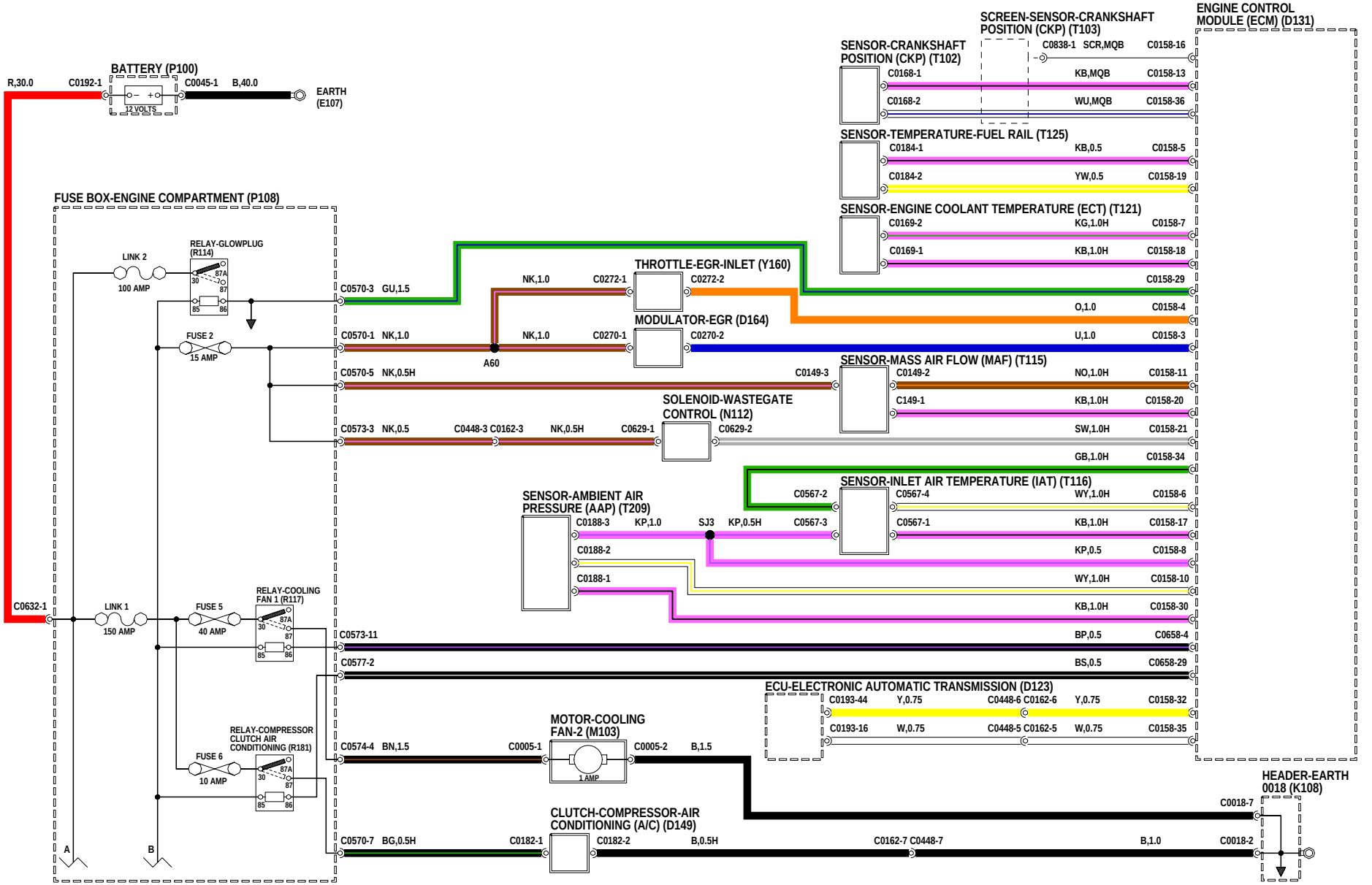
BATTERY (P100)
R,30.0
C0192-1
C0045-1
B,40.0
12 VOLTS
EARTH (E107)
FUSE BOX-ENGINE COMPARTMENT (P108)
LINK 2
100 AMP
RELAY-GLOWPLUG (R114)
FUSE 2
15 AMP
C0632-1
LINK 1
150 AMP
FUSE 5
40 AMP
RELAY-COOLING FAN 1 (R117)
FUSE 6
10 AMP
RELAY-COMPRESSOR CLUTCH AIR CONDITIONING (R181)
A
B
C0570-3 GU,1.5
C0570-1 NK,1.0
NK,1.0
C0272-1
C0272-2
THROTTLE-EGR-INLET (Y160)
NK,1.0
C0270-1
C0270-2
MODULATOR-EGR (D164)
A60
C0570-5 NK,0.5H
C0149-3
SENSOR-MASS AIR FLOW (MAF) (T115)
C0573-3 NK,0.5
C0448-3 C0162-3
NK,0.5H
C0629-1
C0629-2
SOLENOID-WASTEGATE CONTROL (N112)
SENSOR-AMBIENT AIR PRESSURE (AAP) (T209)
C0188-3 KP,1.0
SJ3
KP,0.5H
C0567-3
C0188-2
C0188-1
C0567-2
SENSOR-INLET AIR TEMPERATURE (IAT) (T116)
C0573-11
C0577-2
C0574-4 BN,1.5
C0005-1
MOTOR-COOLING FAN-2 (M103)
1 AMP
C0005-2
B,1.5
C0570-7 BG,0.5H
C0182-1
CLUTCH-COMPRESSOR-AIR CONDITIONING (A/C) (D149)
C0182-2
B,0.5H
C0162-7 C0448-7
B,1.0
C0018-2
C0018-7
HEADER-EARTH 0018 (K108)
SENSOR-CRANKSHAFT POSITION (CKP) (T102)
SCREEN-SENSOR-CRANKSHAFT POSITION (CKP) (T103)
C0838-1 SCR,MQB C0158-16
C0168-1 KB,MQB C0158-13
C0168-2 WU,MQB C0158-36
SENSOR-TEMPERATURE-FUEL RAIL (T125)
C0184-1 KB,0.5 C0158-5
C0184-2 YW,0.5 C0158-19
SENSOR-ENGINE COOLANT TEMPERATURE (ECT) (T121)
C0169-2 KG,1.0H C0158-7
C0169-1 KB,1.0H C0158-18
C0158-29
O,1.0 C0158-4
U,1.0 C0158-3
C0149-2 NO,1.0H C0158-11
C149-1 KB,1.0H C0158-20
SW,1.0H C0158-21
GB,1.0H C0158-34
C0567-4 WY,1.0H C0158-6
C0567-1 KB,1.0H C0158-17
KP,0.5 C0158-8
WY,1.0H C0158-10
KB,1.0H C0158-30
BP,0.5 C0658-4
BS,0.5 C0658-29
ECU-ELECTRONIC AUTOMATIC TRANSMISSION (D123)
C0193-44 Y,0.75
C0448-6 C0162-6 Y,0.75 C0158-32
C0193-16 W,0.75
C0448-5 C0162-5 W,0.75 C0158-35
ENGINE CONTROL MODULE (ECM) (D131)

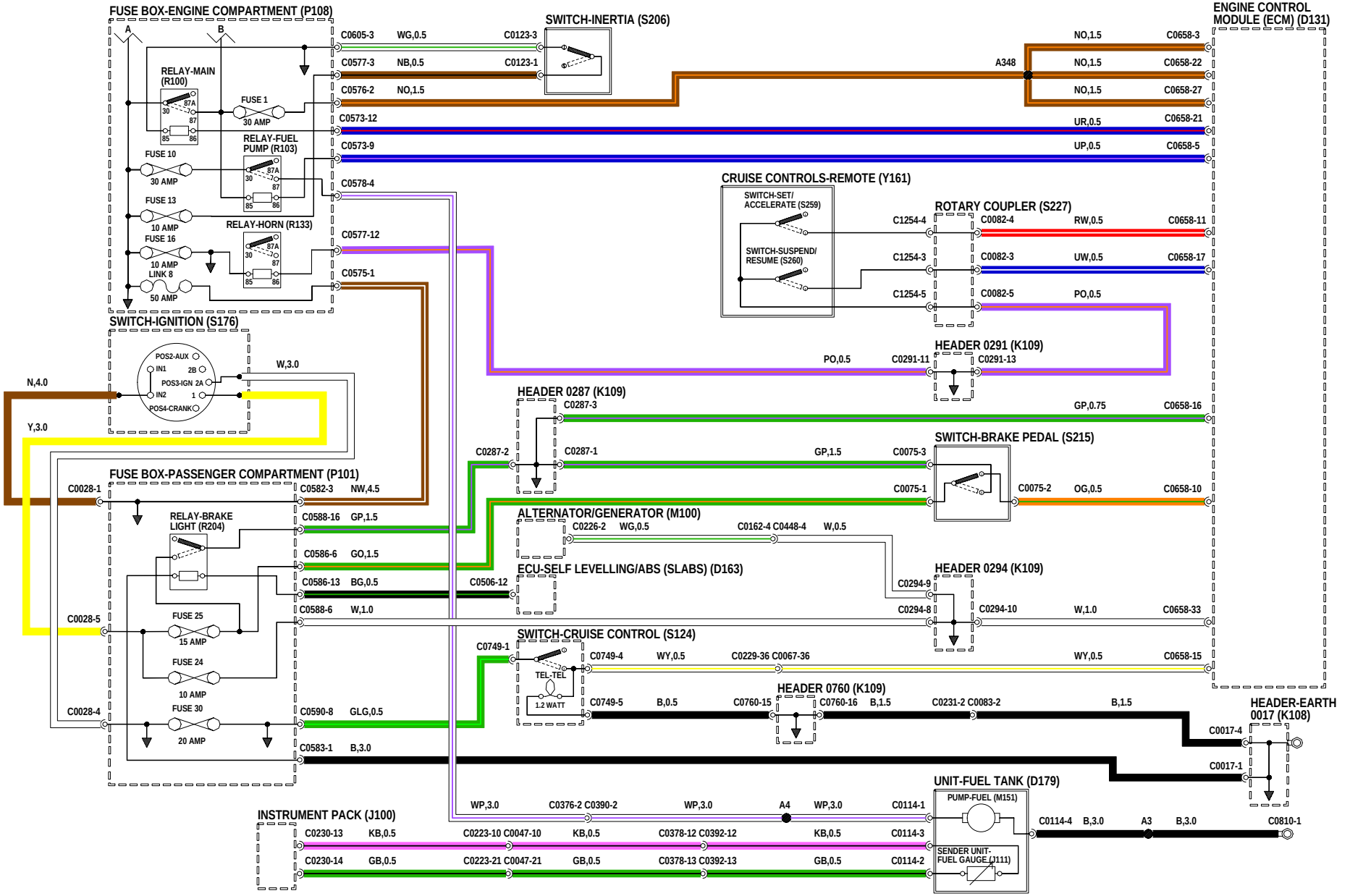
FUSE BOX-ENGINE COMPARTMENT (P108)
A
B
RELAY-MAIN (R100)
87A
30
87
85
86
FUSE 1
30 AMP
RELAY-FUEL PUMP (R103)
FUSE 10
30 AMP
FUSE 13
10 AMP
RELAY-HORN (R133)
FUSE 16
10 AMP
LINK 8
50 AMP
C0605-3 WG,0.5 C0123-3
C0577-3 NB,0.5 C0123-1
C0576-2 NO,1.5
C0573-12
C0573-9
C0578-4
C0577-12
C0575-1
SWITCH-INERTIA (S206)
ENGINE CONTROL MODULE (ECM) (D131)
NO,1.5 C0658-3
A348
NO,1.5 C0658-22
NO,1.5 C0658-27
UR,0.5 C0658-21
UP,0.5 C0658-5
CRUISE CONTROLS-REMOTE (Y161)
SWITCH-SET/ ACCELERATE (S259)
SWITCH-SUSPEND/ RESUME (S260)
ROTARY COUPLER (S227)
C1254-4 C0082-4 RW,0.5 C0658-11
C1254-3 C0082-3 UW,0.5 C0658-17
C1254-5 C0082-5 PO,0.5
HEADER 0291 (K109)
PO,0.5 C0291-11 C0291-13
SWITCH-IGNITION (S176)
POS2-AUX
IN1
2B
POS3-IGN 2A
IN2
1
POS4-CRANK
W,3.0
N,4.0
Y,3.0
HEADER 0287 (K109)
C0287-3 GP,0.75 C0658-16
C0287-2 C0287-1 GP,1.5 C0075-3
SWITCH-BRAKE PEDAL (S215)
C0075-1 C0075-2 OG,0.5 C0658-10
FUSE BOX-PASSENGER COMPARTMENT (P101)
C0028-1 C0582-3 NW,4.5
RELAY-BRAKE LIGHT (R204)
C0588-16 GP,1.5
C0586-6 GO,1.5
C0586-13 BG,0.5
C0588-6 W,1.0
ALTERNATOR/GENERATOR (M100)
C0226-2 WG,0.5 C0162-4 C0448-4 W,0.5
ECU-SELF LEVELLING/ABS (SLABS) (D163)
C0506-12
HEADER 0294 (K109)
C0294-9
C0294-8 C0294-10 W,1.0 C0658-33
C0028-5
FUSE 25
15 AMP
FUSE 24
10 AMP
C0028-4
FUSE 30
20 AMP
C0590-8 GLG,0.5
C0583-1 B,3.0
SWITCH-CRUISE CONTROL (S124)
C0749-1
TEL-TEL
1.2 WATT
C0749-4 WY,0.5 C0229-36 C0067-36 WY,0.5 C0658-15
HEADER 0760 (K109)
C0749-5 B,0.5 C0760-15 C0760-16 B,1.5 C0231-2 C0083-2 B,1.5
HEADER-EARTH 0017 (K108)
C0017-4
C0017-1
UNIT-FUEL TANK (D179)
PUMP-FUEL (M151)
WP,3.0 C0376-2 C0390-2 WP,3.0 A4 WP,3.0 C0114-1
C0114-4 B,3.0 A3 B,3.0 C0810-1
INSTRUMENT PACK (J100)
C0230-13 KB,0.5 C0223-10 C0047-10 KB,0.5 C0378-12 C0392-12 KB,0.5 C0114-3
C0230-14 GB,0.5 C0223-21 C0047-21 GB,0.5 C0378-13 C0392-13 GB,0.5 C0114-2
SENDER UNIT-FUEL GAUGE (U111)

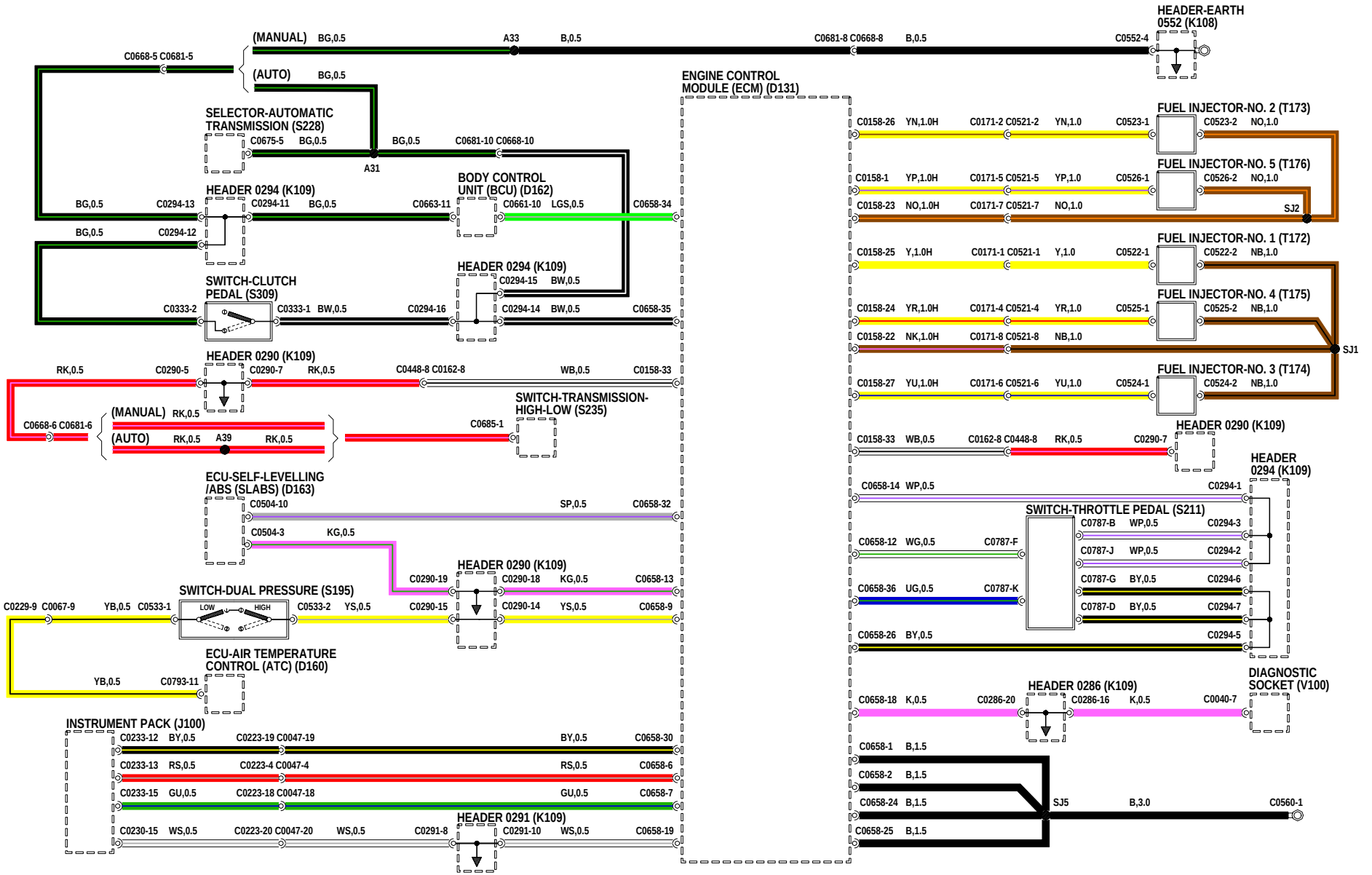
HEADER-EARTH 0552 (K108)
(MANUAL) BG,0.5 A33 B,0.5 C0681-8 C0668-8 B,0.5 C0552-4
C0668-5 C0681-5
(AUTO) BG,0.5
ENGINE CONTROL MODULE (ECM) (D131)
SELECTOR-AUTOMATIC TRANSMISSION (S228)
C0675-5 BG,0.5 BG,0.5 C0681-10 C0668-10
A31
BODY CONTROL UNIT (BCU) (D162)
HEADER 0294 (K109)
BG,0.5 C0294-13 C0294-11 BG,0.5 C0663-11 C0661-10 LGS,0.5 C0658-34
BG,0.5 C0294-12
HEADER 0294 (K109)
C0294-15 BW,0.5
SWITCH-CLUTCH PEDAL (S309)
C0333-2 C0333-1 BW,0.5 C0294-16 C0294-14 BW,0.5 C0658-35
HEADER 0290 (K109)
RK,0.5 C0290-5 C0290-7 RK,0.5 C0448-8 C0162-8 WB,0.5 C0158-33
SWITCH-TRANSMISSION-HIGH-LOW (S235)
C0668-6 C0681-6
(MANUAL) RK,0.5
(AUTO) RK,0.5 A39 RK,0.5
C0685-1
ECU-SELF-LEVELLING /ABS (SLABS) (D163)
C0504-10 SP,0.5 C0658-32
C0504-3 KG,0.5
HEADER 0290 (K109)
C0290-19 C0290-18 KG,0.5 C0658-13
SWITCH-DUAL PRESSURE (S195)
C0229-9 C0067-9 YB,0.5 C0533-1 LOW HIGH C0533-2 YS,0.5 C0290-15 C0290-14 YS,0.5 C0658-9
ECU-AIR TEMPERATURE CONTROL (ATC) (D160)
YB,0.5 C0793-11
INSTRUMENT PACK (J100)
C0233-12 BY,0.5 C0223-19 C0047-19 BY,0.5 C0658-30
C0233-13 RS,0.5 C0223-4 C0047-4 RS,0.5 C0658-6
C0233-15 GU,0.5 C0223-18 C0047-18 GU,0.5 C0658-7
HEADER 0291 (K109)
C0230-15 WS,0.5 C0223-20 C0047-20 WS,0.5 C0291-8 C0291-10 WS,0.5 C0658-19
FUEL INJECTOR-NO. 2 (T173)
C0158-26 YN,1.0H C0171-2 C0521-2 YN,1.0 C0523-1 C0523-2 NO,1.0
FUEL INJECTOR-NO. 5 (T176)
C0158-1 YP,1.0H C0171-5 C0521-5 YP,1.0 C0526-1 C0526-2 NO,1.0
C0158-23 NO,1.0H C0171-7 C0521-7 NO,1.0 SJ2
FUEL INJECTOR-NO. 1 (T172)
C0158-25 Y,1.0H C0171-1 C0521-1 Y,1.0 C0522-1 C0522-2 NB,1.0
FUEL INJECTOR-NO. 4 (T175)
C0158-24 YR,1.0H C0171-4 C0521-4 YR,1.0 C0525-1 C0525-2 NB,1.0
C0158-22 NK,1.0H C0171-8 C0521-8 NB,1.0 SJ1
FUEL INJECTOR-NO. 3 (T174)
C0158-27 YU,1.0H C0171-6 C0521-6 YU,1.0 C0524-1 C0524-2 NB,1.0
HEADER 0290 (K109)
C0158-33 WB,0.5 C0162-8 C0448-8 RK,0.5 C0290-7
HEADER 0294 (K109)
C0658-14 WP,0.5 C0294-1
SWITCH-THROTTLE PEDAL (S211)
C0787-B WP,0.5 C0294-3
C0658-12 WG,0.5 C0787-F C0787-J WP,0.5 C0294-2
C0787-G BY,0.5 C0294-6
C0658-36 UG,0.5 C0787-K C0787-D BY,0.5 C0294-7
C0658-26 BY,0.5 C0294-5
HEADER 0286 (K109)
DIAGNOSTIC SOCKET (V100)
C0658-18 K,0.5 C0286-20 C0286-16 K,0.5 C0040-7
C0658-1 B,1.5
C0658-2 B,1.5
C0658-24 B,1.5 SJ5 B,3.0 C0560-1
C0658-25 B,1.5